Tile Sticker

Print Areas

Product Dimensions: 27mm x 27mm

Printable areas in blue

FRONT

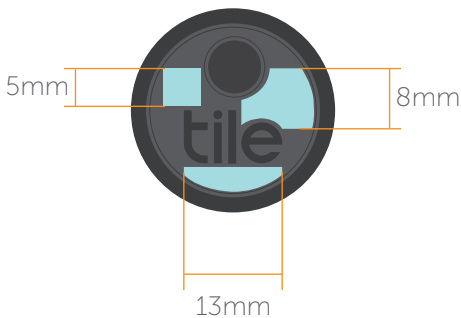

Place artwork here